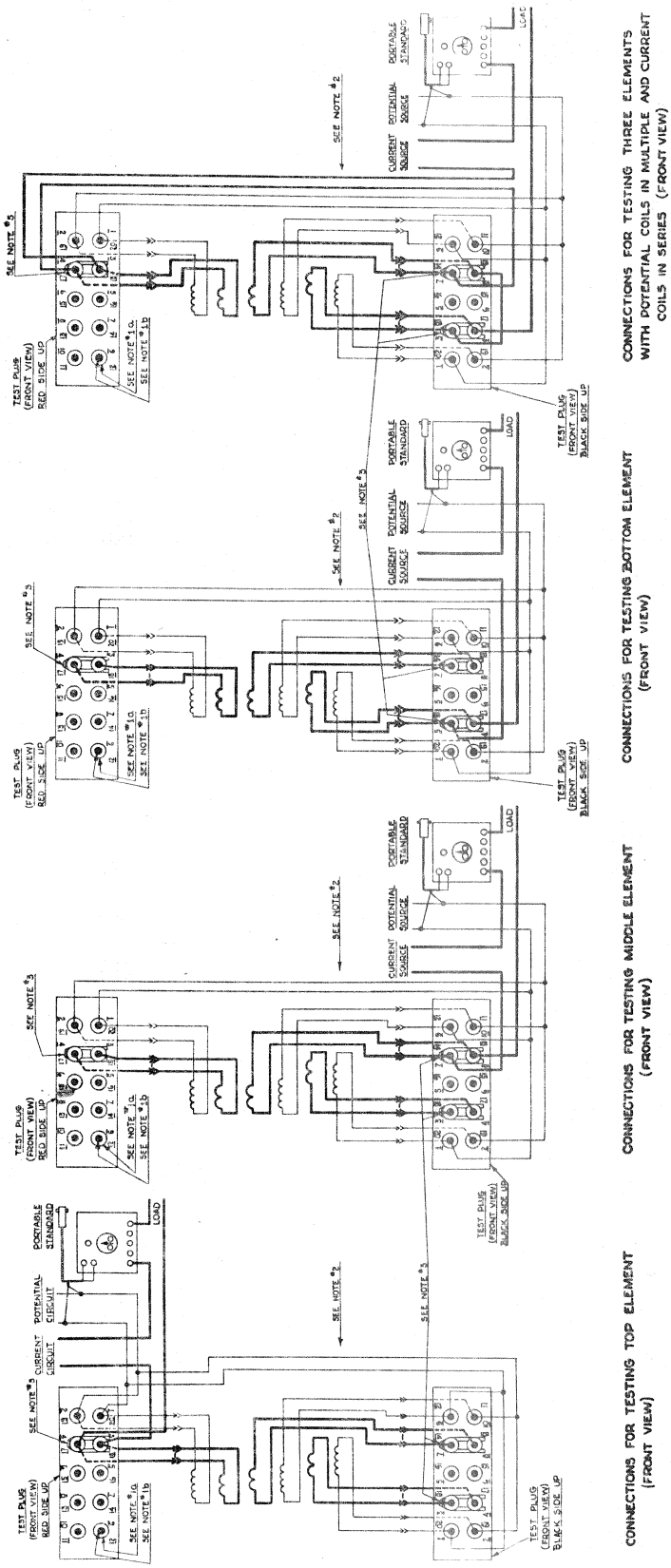

NOTES	
1	CONCENTRIC BINDING POSTS a - RED THUMB NUTS CONNECT TO STUDS b - BLACK THUMB NUTS ENGAGE METER
2	TWO TEST PLUGS MUST BE USED FOR TESTING THE THREE ELEMENT METER TO ISOLATE METER ELEMENTS
3	SHORT CIRCUITING LINK MUST BE LOCATED AS SHOWN BEFORE INSERTING PLUG

Fig. 23 Field testing connections for Types DS-39, DS-41, and DS-44 using test plug model 12XLA12A1